TECHNICAL MANUAL
FOR
MICROPROCESSOR TEMPERATURE CONTROL MODULES
SMP/CMP

MICROPROCESSOR TECHNICAL MANUAL

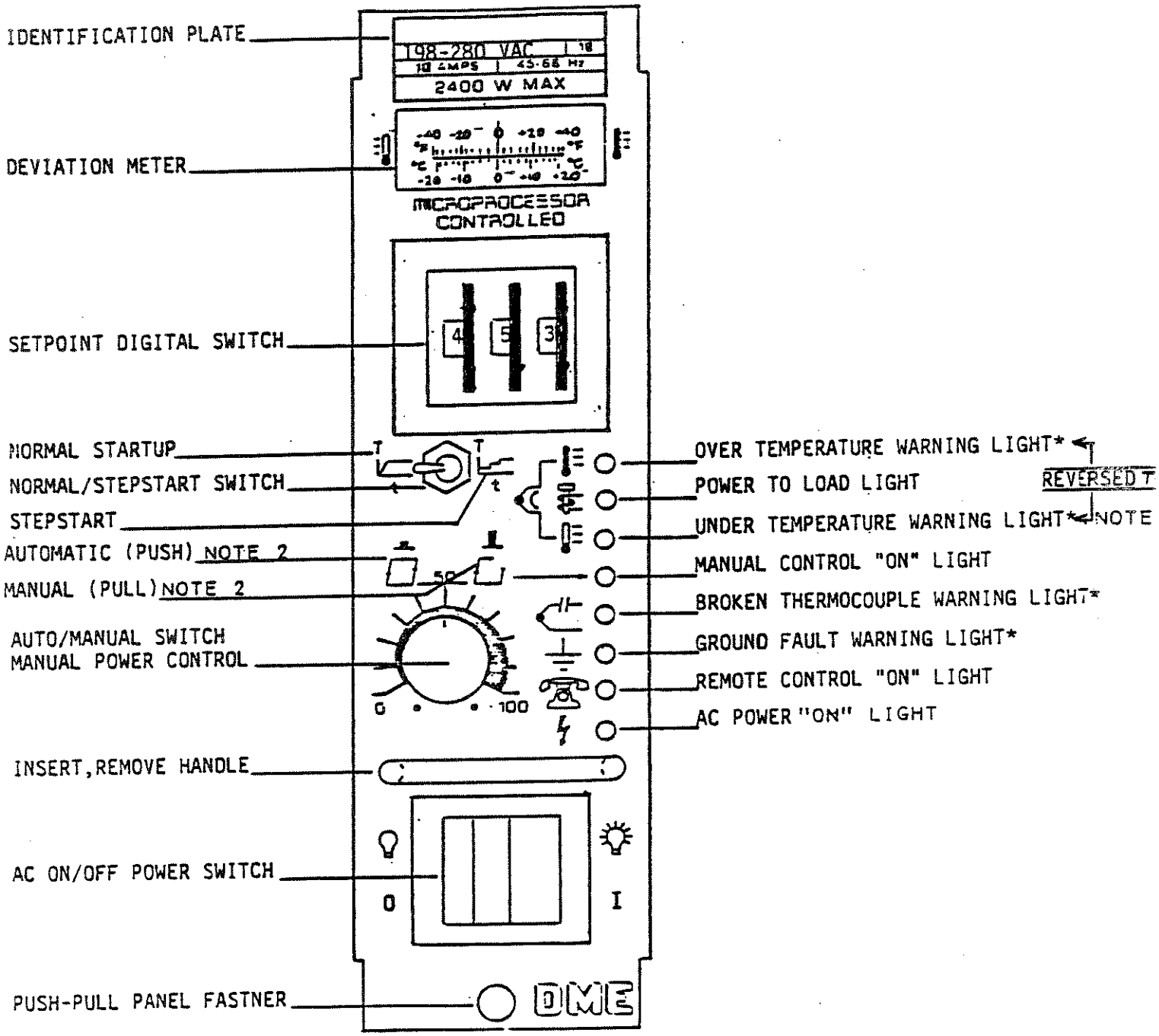

*ANY BLINKING LIGHT INDICATES A PROBLEM OR A CONDITION WHICH IS NOT NORMAL.

NOTE: 1-UNDER TEMPERATURE LIGHT WILL STAY ON FOR STEPSTART PERIOD IF NORMAL/STEPSTART SWITCH IS IN STEPSTART POSITION.

2-AUTO/MANUAL SWITCH IS A PUSH-PULL & ROTARY CONTROL COMBINATION.

TABLE OF CONTENTS

*Available on request. Contact your nearest D-M-E branch.

GENERAL SPECIFICATIONS

Input Specifications:

Input Temperature Sensor	:	Type J thermocouple, grounded or ungrounded
External TC Resistance	:	Greater than 1000 Ohms
Thermocouple Isolation	:	Isolated from ground and line voltage
Cold Junction Compensation	:	Automatic, better than .02 deg/deg
Thermocouple Break Protection	:	Upscale, controller automatically removes heater power or holds before-break power
Reversed TC Detection	:	Automatically detects reversed thermocouple and removes heater power
Input Impedance	:	22 Megohms
Input Protection	:	Overload protection with diode-clamp circuit and RC low-pass filter
Input Amplifier Stability	:	Better than .02 deg/deg
Input Dynamic Range	:	Greater than 1000 deg. F
Common Mode Rejection Ratio	:	Greater than 100 dB
Power Supply Rejection Ratio	:	Greater than 90 dB

Output Specifications:

Output Power Capability	:	10 amperes, 2400 watts, single phase at 240 VAC nominal 15 amperes, 3600 watts, single phase at 240 VAC nominal
Output Voltage	:	240 VAC nominal
Output Power Switch	:	Internal solid-state triac, triggered by zero-crossing pulses; TTL compatible triac trigger for SSR
Output Overload Protection	:	Fused on both sides of AC line; load and triac are protected by a high-speed fuse
Line Transient Protection	:	dv/dt snubber circuit included
Line Isolation	:	Optically and transformer isolated from AC lines; isolation voltage is greater than 2500 volts

Electrical Power Specifications:

Voltage	:	120/240 VAC, ±20%
Frequency	:	48 Hz to 62 Hz
DC Power Supplies	:	Internally generated, regulated and temperature compensated
Power Consumption	:	Less than 3 watts, excluding load

CMP Units Only:

Communication Inputs	:	Both DATA IN and DATA STROBE lines are optically coupled inputs with isolation voltage greater than 2500 volts
Communication Output	:	Optical coupled output; serial data transmitted to accessory modules at 18868 Baud rate

Performance Specifications:

Temperature Range	:	Ambient to 999 deg. F
Temperature Offset	:	Automatically corrects offset to no more than 2 deg. F at all temperature settings
Control Accuracy	:	±.5 deg. F, dependent on the thermal system
Temperature Stability	:	±.5% of full scale over the ambient range of 32 to 140 deg. F
Calibration Accuracy	:	Better than .2% of full scale
Power Response Time	:	Better than .13 second
Compensated Manual Control	:	Maintains constant output power to within 1% of manually set power with line voltage variation from 190 to 280 volts; power control range is from 0 to 100%, using the Selective Cycle power drive
Over Temperature Indicator	:	Over temperature indicator blinks when temperature error is over 20 deg. F
Under Temperature Indicator	:	Under temperature indicator blinks when temperature error is more negative than -20 deg. F
Remote Control Indicator	:	Remote control indicator turns on if: a) controller is using remote temperature set; b) controller is switched to manual mode by an accessory module; or c) controller is switched to Standby Heat mode by an accessory module
Thermocouple Break Detection	:	Thermocouple break indicator blinks; use selectable option to remove heater power or maintain the before-break heater power
Reversed Thermocouple Leads	:	Both over and under temperature indicators will blink and the heater temperature will be limited to 2 times that of the ambient
Ground Fault Shutdown	:	Removes output power and blinks ground fault indicator when ground fault exceeds approximately 20 ma
Step Start (SS) Duration	:	5 minutes
SS Mode Output Voltages	:	Steps from 18 volts to approximately 120 volts with 240 VAC line input
SS Power Cutoff Temperature	:	256 deg. F
SS Override Temperature	:	200 deg. F
Operational Mode Priority	:	Ground fault overrides all modes; Thermocouple break overrides Step Start and normal modes; Reversed thermocouple overrides Step Start and normal modes; Manual control overrides thermocouple break, reversed thermocouple and normal modes; Step Start overrides manual control and normal modes

INSTALLATION

All temperature control modules are ready to use as shipped from the factory. No special unpacking procedures are required prior to installation into a main frame.

> CAUTION: NEVER INSERT OR REMOVE A MODULE FROM A MAIN FRAME WITH THE A.C. POWER ON. ALWAYS DISCONNECT A.C. POWER BEFORE SERVICING SYSTEM TO AVOID DAMAGING THE MODULE AND MAIN FRAME.
>
> HAZARDOUS POTENTIALS EXIST ON COMPONENTS INSIDE OF MODULE. USE EXTREME CAUTION WHEN SERVICING CONTROL SYSTEM WITH POWER APPLIED.

To install a module into a main frame, release the locking device on the lower edge of the front panel by pulling the plunger gently away from the panel. Align the upper and lower edges of the printed circuit board on the module with their respective card guides on the main frame and slide the module all the way into the main frame until the rear connector is completely engaged. Lock the module into the frame by depressing the plunger on the locking device.

OPERATING INSTRUCTIONS
FOR SMP & CMP
MICROPROCESSOR BASED TEMPERATURE CONTROL MODULES

I. GENERAL DESCRIPTION:

Types SMP and CMP temperature control modules are plug-in microprocessor controlled units designed specifically to perform most operator functions automatically. They are self-adjusting and capable of maintaining a very high degree of temperature accuracy over a wide range of operating conditions.

Simplified controls and the use of status lights allow the operator to make adjustments easily. The status lights also provide visual indication of normal or abnormal operating conditions in both controller and load.

All that is required of the operator is to set the temperature desired. From that point on, the module will automatically perform all the operations required to achieve and maintain the selected temperature.

Included in the design of these modules are several safety features designed to protect both the operator and equipment. Some of these safety features will automatically turn the controller output power off, or reduce power to a safe low level. In addition, the type CMP control module is capable of receiving and transmitting digital information with auxiliary plug-in modules for a wide range of local and remote control functions, including future expansion.

II. OPERATION:

A. Automatic Operation
Control settings:
1. Push the AUTO/MANUAL switch in
2. Set the temperature desired on the SETPOINT switch
3. Select either NORMAL or STEPSTART mode of start up
4. Press the A.C. POWER switch to ON

Normal controller indications from a cold start up will be as follows:
a. A.C. POWER light on
b. DEVIATION METER pointer to the left
c. POWER TO LOAD light on
d. UNDER TEMPERATURE light on*
e. All other lights off

*If StepStart is used, UNDER TEMPERATURE light will be on continuously for 5 minutes, then will flash if the temperature is below -20F/11C of set point. If NORMAL start up mode is selected, the UNDER TEMPERATURE light will start to flash immediately.

When starting up from cold, it is recommended that the StepStart mode be used as this will serve to lengthen heater life considerably. The DEVIATION METER pointer will remain at the left until StepStart period is over as the microprocessor maintains load temperature at 256F/124.4C. This temperature is normally well below the set point selected.

With StepStart, the UNDER TEMPERATURE warning light and the POWER TO LOAD light will be on continuously. After the 5-minute StepStart period, the UNDER TEMPERATURE light will start to flash until temperature rises into the lower end of the proportional band. POWER TO LOAD light will stay on as long as any amount of power is being delivered to the load.

When NORMAL start up mode is selected, the UNDER TEMPERATURE light will flash immediately and will continue to flash until temperature enters the lower end of the proportional band. In both cases, StepStart and NORMAL, once temperature enters the proportional band and StepStart period is over, the UNDER TEMPERATURE light will turn off. POWER TO LOAD light will stay on as noted above.

B. Manual Operation

Control settings:

1. Rotate MANUAL power control knob fully counterclockwise
2. Pull AUTO/MANUAL control knob out away from panel
3. Select either NORMAL or STEPSTART mode of start up
4. Press the A.C. POWER switch to ON

Normal controller indications from a cold start up will be as follows:

a. A.C. POWER light on
b. DEVIATION METER pointer to left
c. POWER TO LOAD light off
d. MANUAL control light on
e. All other lights off*

Power to the load is controlled by rotating the MANUAL power control knob in a clockwise direction toward 100 on the dial scale. Power adjustment is from 0 to 100% as indicated. In MANUAL control, as soon as the MANUAL control knob is rotated to a position where power is delivered to the load, the POWER TO LOAD light will go on.

In NORMAL mode of start up, power will be immediately applied to the load up to the level as set by the MANUAL power control knob. If StepStart has been selected, the controller will automatically switch over to the power level as set by the MANUAL power control knob after completion of the 5-minute StepStart period. This applies if the MANUAL power control knob has been preset to a specific power level. It is not necessary for the operator to perform any manual switching to go from StepStart to normal controller operation.

*If StepStart is selected, the controller will proceed with a standard 5-minute StepStart sequence and the UNDER TEMPERATURE as well as the POWER TO LOAD lights will be on continuously during this period. If NORMAL mode is selected, the UNDER TEMPERATURE and POWER TO LOAD lights will remain off as the MANUAL power control knob has been set to zero power.

C. Manual Control Pre-Set

The following procedure can be used to pre-set the MANUAL power control knob position in case of a thermocouple break.

A good thermocouple is required to start with as this procedure compares the temperature attained using automatic control and comparing this temperature with that obtained using manual control. When the temperature is the same using either automatic or manual control, then the position of the MANUAL power control knob is correct.

Procedure for MANUAL Control Pre-Set
Control settings:

1. Set MANUAL power control knob to the 20% mark (2nd mark on left side of scale).
2. Adjust controller for automatic operation as described in Section II, OPERATION, and obtain a molded part. This will adjust the controller to the proper temperature.
3. Pull out the MANUAL power control knob (MANUAL red LED will come on), and note if the DEVIATION METER pointer moves down toward cold or up toward hot.
4. If DEVIATION METER pointer moves down, then rotate MANUAL power control knob clockwise (more power) a small amount. Do the opposite (counterclockwise) if the pointer moves upscale.
5. Adjust MANUAL power control knob until the DEVIATION METER reads zero.

The procedure described sets the position of the MANUAL power control knob. It should be left in this position as long as SETPOINT temperature is not changed. In the event of a thermocouple break during AUTO operation, it is only necessary to pull the AUTO/MANUAL switch out in order to continue processing. Make a note of both the temperature as indicated on the SETPOINT switch and the % of power as indicated on the % POWER control knob scale.

NOTE: Both the SMP and CMP controllers have a user selected option which will automatically continue operation, as it will "remember" power setting in the event of a thermocouple break.

D. Standby Heat

Standby Heat is normally a low heat level used to keep heaters and associated equipment warm for a period of time. Its purpose is to prevent moisture build-up in heaters and equipment and provide for a somewhat faster build-up to operating temperature.

Standby Heat can be obtained in several ways as follows:

1. Adjust the SETPOINT switches to a low temperature level. When starting up, they must be reset to the correct process temperature. Keep a record of the SETPOINT temperatures or write it in the space provided next to the zone number on the main frame.

2. Adjust MANUAL power control for a low power setting. This can be done by following the procedure as explained under Section C, Manual Control Pre-Set. After pre-setting to a low value, when Standby Heat is wanted, pull the AUTO/MANUAL knob out. For normal automatic heat, push the AUTO/MANUAL knob in. The red LED indicating MANUAL control will light when the AUTO/MANUAL knob is pulled out.

3. Install a Standby Heat module. These can only be used in MFC type main frames with CMP controllers. The Standby Heat module will control all zones simultaneously and automatically. It can also set the temperature on all zones at a level adjusted by the operator.

STATUS LIGHT INDICATIONS:

Any light that flashes at a constant rate indicates a fault that has been detected by the module.

STATUS LIGHT	FLASHING	ON STEADY	OFF
OVER TEMPERATURE	Temperature too high. Thermocouple reversed. Thermocouple (T/C) broken or disconnected (will flash for a short period).	*	Temperature is in proportional band or at Setpoint.
POWER-TO-LOAD	Will flash ON/OFF at a rate determined by module to maintain temperature. Intermittent connection in TC wiring. Electrical noise in TC wiring. Random flashing.	Power supplied to load (normal).	Power-to-load off.
UNDER TEMPERATURE	Temperature too low. T/C reveresed.	Controller in Step-Start mode; will be on for 5 minutes.	Temperature is in proportional band or at Setpoint.
MANUAL CONTROL	Will not flash.	AUTO/MANUAL Switch in "out" position; module is in Manual mode.	AUTO/MANUAL Switch in "in" position; module is in Automatic mode.
BROKEN/OPEN THERMOCOUPLE	T/C broken, open or disconnected.	*	Normal; T/C O.K.
GROUND FAULT	Load or load wiring shorted or has low resistance to ground.	*	Normal; Load circuit O.K.
REMOTE CONTROL	Noise or intermittent in communication buss. Random flashing.	Module is in the control of an accessory or remote control module.	Normal; module is in local control.
A.C. POWER	Will not flash.	Module power is on.	Module A.C. ON/OFF Switch "OFF". Fuses open. Main frame disconnect "OFF". A.C. main voltage phase failure. A.C. main supply breaker, fuse, switch open.

*When random or intermittent indications appear, check module operation by turning the module "OFF" and then "ON" again. This will reset all the module functions to doublecheck any problem. If the same conditions reappear, further checks must be made, as a problem may exist either in the load circuit or the thermocouple circuit. If the module is suspect, switch the unit with a known good module.

TECHNICAL FEATURES & DESCRIPTION
MICROPROCESSOR BASED TEMPERATURE CONTROL MODULES

The new D-M-E G-Series temperature control modules are intelligent units based on the latest microprocessor technology. Many temperature control features that were considered impractical if not impossible to achieve are now incorporated into this new state-of-the-art module.

Despite the inclusion of numerous new and unique concepts in its electronic design, functional operation of the module is exceptionally simple. For most temperature control applications, just set the temperature and turn on power. The intelligent module will do the rest, providing extremely reliable and accurate temperature control. For more sophisticated temperature control applications, the CMP-10-G modules already contain built-in flexible features to meet the most demanding requirements of the present and future.

1. FEATURES: Intelligent Microprocessor Based Temperature Control Modules

All controller logic functions are implemented by a single chip microcomputer. Circuits fabricated inside the microprocessor chip are designed to implement the following functions:

a) CPU - controls all logic operations
b) I/O Ports - interfaces CPU with the outside circuitry
c) ROM - stores the logic programs
d) RAM - stores the dynamic data
e) Timer - controls and times the A/D operations

2. STEPSTART:

Conventionally, surges or pulses of high voltage and high power are applied to a heater load when A.C. power is first turned on. The StepStart feature prolongs the life of heaters by eliminating these surges of voltage and power. When A.C. power is first turned on, the StepStart feature applies small, gradually increasing steps of voltage to the heater over a pre-set period of 5 minutes.

A detailed description of the StepStart logic sequence is given as follows:

When the StepStart feature is selected and 240 volt A.C. power is turned on, the controller first reads the thermocouple temperature. If the initial temperature exceeds 200°F, the controller bypasses the StepStart mode and automatically switches to normal operation. If the initial temperature is under 200°F, then a phase-fired voltage of about 18 volts is applied to the heater. Voltage is then gradually stepped up by approximately 1.5 volts every 2.1 seconds. This process continues for a period of 5 minutes, allowing the voltage to reach a maximum RMS value of about 120 volts. Normally, the StepStart mode will take 5 minutes to complete. However, it can be terminated earlier if one of the following commands is sensed by the module:

a) StepStart is switched to OFF
b) Receives a command to terminate StepStart
c) Ground fault exists
d) TC break exists
e) Reversed TC condition exists

When a module exits from StepStart mode, it will enter into either automatic or manual mode, depending on the setting of the AUTO/MANUAL control switch. Note, when the system A.C. power is first turned on and StepStart mode is selected, StepStart overrides MANUAL.

During the active StepStart period, if the heater temperature rises above 256°F, power is turned off automatically to cool down the heater. When the temperature falls below 256°F, power is turned on again. Therefore, during the StepStart period, heater temperature is maintained at 256°F. The StepStart 5-minute timing period is not affected by the power ON/OFF cycling to maintain heater temperature.

If the StepStart switch is on and the TC temperature is below 200°F, a RESET command from an accessory module can re-initiate the StepStart mode. This feature can be used to extend StepStart timing for an unlimited duration. Since StepStart timing is accurately controlled by line frequency, all controllers will be synchronized to function simultaneously.

A front panel switch is provided to enable or disable the StepStart feature. When the module is in the Step-Start mode, the UNDER temperature indicator is on continuously and the meter indicator is deflected to the left (cold) end of the scale.

3. SELECTIVECYCLE POWER DRIVE:

SelectiveCycle is a unique method of applying power to a heater load. This new method (patent applied for) offers the following advantages over conventional systems:

a) Prolongs heater life due to the smooth, continuous application of A.C. power
b) Improves response time by eliminating long cycle time delay
c) Eliminates surge load on A.C. power lines by removing bursts of high current
d) Switches power on during zero line voltage to eliminate RFI
e) Reduces heater thermal expansion and contraction due to the smooth, constant application of power

In brief, the SelectiveCycle system operates as follows:

If a heater requires half power, the SelectiveCycle system will deliver a programmed continuous power pattern with the required amount of on and off half cycles.

Similarly, if a heater requires one-third power, then the SelectiveCycle system delivers a continuous reduced power pattern as needed by the heater, with one ON half cycle for every two OFF half cycles. This power pattern will continue as long as the load calls for this particular power level.

To assure a smooth application of power, SelectiveCycle is capable of generating 64 different primary output power levels and is able to smoothly switch from one level to another level in 0.13 second in the event that an intermediate or secondary level is required. In this manner, the microprocessor digitally-controlled system can deliver discrete power levels with <u>excellent</u> resolution in order to achieve <u>superb</u> temperature control.

SelectiveCycle is used in both the automatic and manual modes, but it is not used in the StepStart mode where an automatically programmed phase-fired method is employed.

A yellow LED indicator lamp is included on the controller front panel. This lamp will be on continuously whenever power is being delivered to the heater.

4. OVER & UNDER TEMPERATURE INDICATORS

In automatic control mode, if the heater temperature is 20°F or more below set point, the UNDER temperature LED will blink. Similarly, if the heater temperature is 20°F or more above the set point, the OVER temperature LED will blink.

Both OVER and UNDER temperature functions will be inhibited if any one or more of the following conditions are encountered:

a) StepStart is in operation
b) MANUAL is on
c) TC broken or open
d) Reversed TC wires

5. THERMOCOUPLE BREAK SHUTDOWN/HOLD AND INDICATOR

If the input thermocouple is opened, the TC break red LED will blink. Two different optional actions can be taken by the module in response to a TC break. They are as follows:

a) If the TC hold jumper is left open (U6 pin 3 is opened or jump points (3) to (4), then the module will cut off A.C. power to the heater.
b) If the TC hold jumper is inserted (U6 pin 3 is grounded), then the module will maintain the output power level equal to that present 2-4 seconds prior to TC break. To prevent possible overheating, this option is automatically defeated if the temperature deviation (TC probe temperature minus set point temperature) is more negative than -4°F.

In both options, thermocouple break turns off the UNDER and OVER temperature LED lamps. Also, the meter will deflect to the extreme right and the TC break LED will continue to blink. Manual control overrides all TC break functions so that temperature can still be maintained without the thermocouple.

6. REVERSED THERMOCOUPLE SHUTDOWN AND INDICATOR

A controller will enter the reversed TC safety mode if all of the following conditions are met:

a) AUTO/MAN switch is in AUTO
b) Thermocouple is reversed
c) Heater temperature is higher than 2 x Ta where Ta is the ambient temperature

In the reversed TC mode, the following will occur:

a) Heater power is cut off
b) Both UNDER and OVER temperature LED indicators will blink
c) Meter deflects down scale

Note that heater temperature starts to drop after heater power is turned off. As the temperature drops below 2 x Ta, the controller resumes the normal mode with full power on, raising heater temperature to above 2 x Ta. The module will then re-enter reversed TC mode as above.

MANUAL mode overrides reversed TC mode. However, since the thermocouple is reversed, the meter cannot indicate the true temperature error.

If a controller is turned on with StepStart selected, reversed TC will terminate the StepStart mode and initiate the reversed TC mode when heater temperature reaches 2 x Ta.

7. LINE VOLTAGE COMPENSATED MANUAL CONTROL

In MANUAL mode, a unique feature is used to compensate for line voltage variations automatically and precisely. For example, suppose the line voltage increases, the module will generate an inverse-square function and add it to the MANUAL control setting to reduce the output power duty cycle so that the original heater temperature is maintained.

MANUAL mode also utilizes the SelectiveCycle program for a smooth flow of power to the heater.

In MANUAL mode, indicators affected are listed as follows:

a) MANUAL LED indicator turns on
b) UNDER temperature, OVER temperature and TC break LED indicators turn off
c) LOAD LED indicator turns off only if the manual selected power is zero
d) Meter shows actual temperature deviation from set point if the TC is still operational

8. AUTOMATIC RESET

The automatic reset feature guarantees that temperature error will not exceed 2°F at all temperature settings, thus eliminating the need for proportional band adjustments. The actual proportional band of the system is 40°F. However, the programmed logic integrator limits the steady state error to less than ±2°F.

To prevent the automatic reset function from affecting the module's dynamic performance, this feature is activated only if several programmed operating conditions are met.

In operation, the automatic reset logic generates a compensation signal to reduce the error at a predetermined rate. The magnitude of the compensation signal is also limited and controlled. In order to eliminate integration memory, the compensation signal is cleared automatically to zero whenever temperature error exceeds 50°F.

9. TEMPERATURE OVERSHOOT SUPPRESSION

Temperature overshoot is suppressed by means of microprocessor generated variable rate or derivative feedback control. If a fast rising temperature is detected, a corrective compensation signal is generated to reduce the output power and thus slow down the rate of temperature rise. This corrective signal is continually generated and adjusted during the period of temperature rise. In this way, rapid heat-up is accomplished together with overshoot suppression.

10. GROUND FAULT SHUTDOWN AND INDICATOR

A ground fault of approximately 20 Ma will drive the controller in GFI mode and the GFI LED indicator will blink. The yellow POWER LED will turn off.

a) If the controller is initially in StepStart mode, GFI will switch the controller from StepStart to MANUAL or AUTO mode and inhibit the output power.
b) If the controller was initially in MANUAL or AUTO mode, GFI will not change any function except inhibiting the output power.

When the ground fault is removed, the module will resume normal AUTO or MANUAL mode.

11. USER SELECTABLE DEGREES F/C TEMPERATURE SET

If pin 35 of U6 is open, the set point temperature switch setting or remote temperature data will be interpreted in degrees F.

If pin 35 of U6 is shorted to ground (jumper (2) on P.C. board), the set point switch setting or remote temperature data will be interpreted in degrees C. The following scale transformation is automatically performed by the microprocessor: $C = 5/9\ (F-32)$

Therefore, no jumper module is set for °F. With jumper installed, module is set for °C.

12. BLINKING INDICATORS FOR ABNORMAL OPERATION

Whenever ANY indicator is blinking, a malfunction of the system has been detected by the module. Parameters monitored by this feature are:

a) UNDER temperature
b) OVER temperature
c) Thermocouple break
d) Reversed thermocouple
e) Ground fault

13. COMMUNICATION WITH ACCESSORY MODULES

Serial communication is used to transmit and receive data between modules and accessory modules. Data rate from accessory modules is 1 bit per period of line frequency. Each message bit is held over 1 full period of line voltage so that modules using any one of the three line phases can access the same message at a line zero crossing interrupt.

In the receiving mode, each module is continuously shifting a message bit into a message buffer at every alternating line zero crossing interrupt. When a message complete strobe is received, the module starts to process the message. If the message address matches the local address or is universal, execution of the command begins. If the command requests return information, the module turns the received message around with the added requested data and transmits it back to the accessory module. The transmission rate is 18868 bits per second. Every transmitted message is terminated with a logical 1.

14. 50/60 HERTZ AND 240/120 VOLT OPERATION

Modules can be used with 50 or 60 Hertz supply line frequency. For 50 Hertz operation, connect U6 pin 34 to ground or install jumper (1) on the P.C. board.

Modules are normally supplied for 240 volt operation. For 120 volt applications, the following modifications are required:

a) For circuit boards dated 10/81:
   1. Cut the copper land connecting T2 terminals 2 & 3.
   2. Connect T2 terminals 1 & 3 with a jumper.
   3. Connect T2 terminals 2 & 4 with a jumper.

b) For circuit boards dated 2/82:
   1. Install jumpers as indicated on the circuit board.

15. INDICATORS

a) Power On
b) Load
c) Remote Control
d) TC Break
e) Over Temperature
f) Under Temperature
g) GFI
h) Manual
i) Temperature Deviation Meter

16. CONTROLS

a) Temperature Set Point; Digital Thumbwheel Switch, 3 digits
b) Power On; Rocker Type Switch
c) StepStart On; Toggle Switch
d) Manual-Automatic; Rotary Potentiometer with push/pull on/off switch
e) Analog Temperature Deviation Meter; "0" Center

17. ZERO VOLTAGE CROSSING TRIAC DRIVE

To minimize RFI (radio frequency interference), the triac is turned on near the zero crossing points of the line voltage.

Control circuits are electrically isolated from the A.C. power lines by optical couplers and transformers.

18. HIGHLY ACCURATE RATIOMETRIC A/D CONVERSION

Highly accurate and stable temperature control is achieved with a ratiometric A to D conversion technique. All A to D offset and scaling errors are mathematically cancelled by the microprocessor program.

19. AUTOMATIC COLD JUNCTION COMPENSATION

Cold junction generated voltage is compensated out to less than ±.02°F/F.

20. EXPANDABLE FEATURES WITH ACCESSORY MODULES (Partial Listing)

a. Remote Over/Under Temperature Alarm with dry relay contact output, audible alarm and LED indicators. Over and under temperature limits may be selectable for each zone in the advanced remote temperature alarm modules.
b. True RMS load current and load power monitors
c. Remote temperature pyrometer
d. Temperature recording
e. Remote programmable temperature set
f. Selectable TC types (J,T,K,E) with non-linearity compensation
g. Remote SlowStart start and stop
h. Recording of temperature set
i. Remote selectable MAN/AUTO mode
j. Remote control standby or weekend heat
k. Remote monitoring of controller operational status, such as GFI, reversed TC, TC break, Over and Under temperature, Manual mode, StepStart mode, load power on and percentage output power
l. Remote monitor of temperature error
m. Remote reset
n. Remote shutdown and temperature inhibit
o. Etc., Etc., Etc.

NOTE: Some of the above features may be combined in one module.

THEORY OF OPERATION

Unlike conventional circuits, microprocessor-controlled circuits eliminate the need for complex feedback loops and circuit interconnections. As a result, the microprocessor temperature controller consists of several dedicated circuits that either supply input information to the microprocessor or accepts an output signal from the microprocessor.

Referring to the block diagram, the SPP674AR microcomputer (U6) includes a microprocessor, memory storage (including the program that governs all functions of the controller), and digital interface circuits that allow up to 32 input and output functions. The microcomputer continuously monitors several inputs (including the thermocouple voltage and front panel controls), and then evaluates the input information and determines the proper outputs for the triac, deviation meter and the front panel indicators.

INPUT CIRCUITS

A type J thermocouple senses the temperature in the heated zone and applies a voltage to the module's thermocouple amplifier (U2). The thermocouple amplifier increases the signal 57 times, compensates for ambient temperature variations (cold junction compensator U3a) and detects an open thermocouple (by generating a large thermocouple signal). The output of the thermocouple amplifier is applied to one of the inputs of the analog-to-digital converter (U5), where the analog voltage is converted to a digital output, compatible with the microcomputer.

Other inputs to the analog-to-digital converter are the manual power control, V sense and circuit ground. The manual power control (R34) applies a voltage that is proportional to the percentage of power set by the operator. V sense is a D.C. voltage that varies with the A.C. line voltage variations. This signal is used during the manual mode of operation to adjust the output power to the heater as the line voltage varies. Circuit ground is also monitored by the microcomputer. Since small voltage drops on the ground line may introduce errors in the voltage measurements, the microcomputer compensates for this error with each measurement. This also eliminates the need for circuit adjustments and recalibration.

The zero volt crossing detector (U3C and U8B) monitors the A.C. line and sends a digital pulse to the microcomputer each time the A.C. line crosses through zero volts. This pulse is used by the microcomputer to trigger the triac at the precise moment the A.C. line is at zero volts. This method of triggering eliminates large surge currents that can produce electrical interference in the digital circuits.

The ground fault detector (U3B and U4C) monitors the A.C. line for leakage currents to earth ground. A digital pulse is sent to the microcomputer whenever a leakage current of 20 Ma or more is detected. The microcomputer will shut off the triac when a ground fault is detected, regardless of the mode of operation that the module is in. Once the ground fault is cleared, the microcomputer will resume in the normal mode of operation.

The Set Point switch, the Normal/StepStart switch and the Auto/Manual switch connect directly to the microcomputer. The microcomputer monitors the setting on these switches continuously with the exception of the StepStart switch. The StepStart switch is only checked during power up. Once the controller enters the normal mode,, StepStart can only be selected by shutting power off to the module and then turning it back on.

OUTPUT CIRCUITS

The microcomputer has three basic outputs:

1. Triac triggering to control power to the load
2. A digital output to indicate deviation
3. Six digital outputs to indicate operating conditions

Triac triggering is accomplished by a digital pulse from the microcomputer to an optically coupled SCR. This provides isolation between the module's circuits and the A.C. line. During the first second after power is applied to the module, triac triggering is inhibited (by U4C) to avoid improper triggering while the microcomputer is initialized (by U8A).

The microcomputer's output to indicate deviation consists of six digital signals which are applied to a digital-to-analog converter (U3D) and an analog meter with a zero center. Due to the digital signals, the meter will appear to move in steps across its span (-40 to +40°F, -20 to +20°C). The microcomputer will display one of 64 possible readings across the span of the meter.

The front panel LED indicators are also controlled by the microcomputer, with the exception of the Power On (green) and the Manual Mode indicator (which is driven directly from the power supply) and the Manual Mode indicator (which is hard-wired to the Auto/Manual switch). The remaining six indicators are: Over Temperature, Power to the Load, Under Temperature, Broken Thermocouple, Ground Fault and Remote Control. In addition to these six, the microcomputer will indicate a reverse thermocouple condition by flashing the Over Temperature and the Under Temperature indicators simultaneously. To indicate that the controller is in the StepStart mode, the microcomputer will turn on the Under Temperature light; and to indicate an under temperature condition, the microcomputer will flash the Under Temperature indicator.

THE MICROCOMPUTER

The basic operation of the microcomputer is to "read" information from the input circuits, analyze the information and then respond by supplying the correct signals to the output circuits to perform a specific function. The microcomputer reads information from the analog-to-digital converter by selecting one of its four inputs by way of a three-digit binary code (pins 1, 2 and 16 on U5).

Triac triggering is performed by a unique method called SelectiveCycle power drive. The microcomputer selects one of 64 possible power patterns to deliver 0 to 100% of full power to the load. Each power pattern is a particular combination of half cycles over a 32-cycle period of the A.C. line. Although 32 cycles represent a complete power pattern, the microcomputer can switch from one power pattern to another every 8 cycles of the line. This allows the controller to achieve intermediate power levels other than the 64 internally programmed patterns. During the StepStart mode of operation, the microcomputer will phase-fire the triac. This is done to slowly increase the heater "on" current from minimum to maximum over a 5-minute period.

The module has three basic modes of operation:

1. Manual power control
2. Automatic feedback control
3. StepStart

Manual Power Control: In the manual mode, the microcomputer reads the setting on the manual control potentiometer, then selects a power pattern (for triac triggering) to correspond to the setting. To insure a constant power level to the load, the microcomputer also reads the V sense input (line voltage) and may select a different power pattern to compensate for line voltage variations. The thermocouple need not be connected in manual mode; however, should it be connected, the microcomputer will also read the thermocouple voltage and compare it to the set point switch setting. The difference between the set point and the thermocouple signal (called deviation) is displayed on the deviation meter. This allows the operator to measure the zone temperature by setting the set point switch for a reading of zero on the deviation meter. Two conditions will cause the microcomputer to terminate the manual mode:

1. If a ground fault is detected
2. If the module is powered up in the StepStart mode

Automatic Feedback Control: In the automatic mode, the microcomputer reads the thermocouple voltage, compares it to the set point setting and then selects a power pattern to be delivered to the load. In so doing, the microcomputer considers many factors that govern temperature control. The microcomputer continuously makes calculations that determine the deviation from set point, the rate at which the zone temperature changes and the specific power pattern required to maintain a constant temperature in the zone. By accounting for all these factors, the controller is classified as a fully automatic PID (proportional, integral and derivative) type controller. This means that the operator merely sets the desired temperature and the module will account for process variables to achieve the desired setting. All front panel indicators are active in the automatic mode. Refer to the operating instructions for a detailed description of these indicators.

StepStart: StepStart is a special control circumstance where the module supplies power to the load in gradual increments. StepStart only occurs at the time the system is powered up. During StepStart, the microcomputer operates in the automatic feedback control mode and performs the following additional functions:

1. Regardless of the set point switch setting, the module will consider the set point to be 256°F.
2. In addition to selecting the proper power pattern for the load, the microcomputer will phase-fire the triac. At power up, the triac is fired late in the half cycle, which results in a reduced voltage level to the load. Over the 5-minute period of StepStart, the angle of firing is slowly increased until the maximum voltage of the line is applied to the load.
3. At the beginning of StepStart, the microcomputer reads the thermocouple voltage. If the zone temperature is 200°F or more, the microcomputer will consider StepStart as unnecessary and will go to the SelectiveCycle mode. Otherwise, the 5-minute StepStart period is valid; at the end of the 5-minute period, the module will go into the SelectiveCycle mode.
4. The microcomputer monitors the Normal/StepStart switch during StepStart (this allows the operator to terminate the StepStart function). Once the module enters the SelectiveCycle mode, the microcomputer no longer monitors the Normal/StepStart switch.

A more sophisticated module will also have the ability to transfer information to and from an accessory module. This allows an accessory module to monitor information (such as, zone temperature, set point setting, deviation) for a particular zone or to change control settings (such as, Set Point, Auto/Manual, StepStart) for a particular zone. When an accessory module has control, the microcomputer will turn on the remote control indicator.

ELECTRICAL PARTS LIST

The Model SMP-10-G/SMP-15-G and the Model CMP-10-G/CMP-15-G are microprocessor controlled temperature control modules that use similar circuitry. Many of the parts used are common to both types, while some are used only in the CMP version. The following is a complete list showing all of the electrical parts. It is important to note that not all parts appear in all units.

CIRCUIT NUMBER	DESCRIPTION	PART NUMBER
C9,C18-23	Capacitor, Electrolytic, .47uf/50V	PDR47M50M-LE
C3,C4,C6,C7 C12,C14,C15	Capacitor, Electrolytic, 10uf/16V	PDA10M16M-LE
C11	Capacitor, Electrolytic, 22uf/10V	PDA22M10M-LE
C5	Capacitor, Electrolytic, 47uf/10V	PDA47M10M-LE
C16	Capacitor, Electrolytic, 100uf/16V	PDA100M16M-LE
C13	Capacitor, Electrolytic, 4700uf/16V	TDB4700M16M
C17	Capacitor, Ceramic, .01uf/50V	DB207Z5P103K
C2	Capacitor, Ceramic, 0.1uf/50V	DB207Z5P104K
C8	Capacitor, Film, .01uf/100V	EM1001A
C10	Capacitor, Film, .1uf/630V	PMG1000-6A
C1	Capacitor, Tantalum, 10uf/16V	DP10M16A
CR1-CR4 CR6,CR23	Diode, Light Emitting, Red	TIL209A
CR5	Diode, Light Emitting, Yellow	TIL212-2
CR28	Diode, Light Emitting, Green	TIL232-2
CR24,CR27	Bridge Rectifier	IDB400
M1	Meter, Deviation, Edgewise	IM36
Q1	Triac, Power, 25 Ampere	Q4025Z5
Q2	Transistor, Power, NPN	TIP31
Q3	Transistor, Silicon NPN	2N4401
Q4	Zener, Programmable	TL431CLP
Q6	Transistor, Silicon, PNP	2N4403
R18	Resistor, Carbon Film, 220 ohms, 5%, ¼w	RAB.25J221
R57	Resistor, Carbon Film, 270 ohms, 5%, ¼w	RAB.25J270
R36,R62,R63	Resistor, Carbon Film, 330 ohms, 5%, ¼w	RAB.25J331
R1-R6	Resistor, Carbon Film, 680 ohms, 5%, ¼w	RAB.25J681
R29,R40,R59 R46,R60,R47	Resistor, Carbon Film, 1000 ohms, 5%, ¼w	RAB.25J102
R26	Resistor, Carbon Film, 1.2K, 5%, ¼w	RAB.25J122
R8,R10,R48 R49	Resistor, Carbon Film, 2.2K, 5%, ¼w	RAB.25J222
R28,R76,R77	Resistor, Carbon Film, 3.3K, 5%, ¼w	RAB.25J332
R48,R50-R52	Resistor, Carbon Film, 4.7K, 5% ½w	RAB.25J472
R74	Resistor, Carbon Film, 5.6K, 5%, ¼w	RAB.25J562
R30,R33,R41 R54	Resistor, Carbon Film, 10K, 5%, ¼w	RAB.25J103
R73	Resistor, Carbon Film, 30K, 5%, ¼w	RAB.25J303

CIRCUIT NUMBER	DESCRIPTION	PART NUMBER
R35	Resistor, Carbon Film, 39K, 5%, ¼w	RAB.25J393
R20,R37,R43	Resistor, Carbon Film, 47K, 5%, ¼w	RAB.25J473
R71	Resistor, Carbon Film, 82K, 5%, ¼w	RAB.25J823
R25,R65,R58	Resistor, Carbon Film, 100K, 5%, ¼w	RAB.25J104
R31	Resistor, Carbon Film, 150K, 5%, ¼w	RAB.25J154
R66	Resistor, Carbon Film, 200K, 5%, ¼w	RAB.25J204
R32	Resistor, Carbon Film, 220K, 5%, ¼w	RAB.25J224
R67	Resistor, Carbon Film, 390K, 5%, ¼w	RAB.25J394
R21	Resistor, Carbon Film, 680K, 5%, ¼w	RAB.25J684
R68	Resistor, Carbon Film, 820K, 5%, ¼w	RAB.25J824
R27,R53	Resistor, Carbon Film, 1.0 meg., 5%, ¼w	RAB.25J105
R69	Resistor, Carbon Film, 1.6 meg., 5%, ¼w	RAB.25J165
R70	Resistor, Carbon Film, 3.3 meg., 5%, ¼w	RAB.25J335
R39	Resistor, Composition, 100 ohms, 10%, ½w	RAD.5K101
R38	Resistor, Composition, 330 ohms, 10%, ½w	RAD.5K331
R7	Resistor, Composition, 22 meg., 10%, ¼w	RAD.25K226
R17	Resistor, Precision, 1K, 1%	RAN.25F1001D
R9	Resistor, Precision, 2.67K, 1%	RAN.25F2671D
R23	Resistor, Precision, 3.40K, 1%	RAN.25F3401D
R22	Resistor, Precision, 6.65K, 1%	RAN.25F6651D
R44,R45	Resistor, Precision, 10K, 1%	RAN.25F1002D
R12	Resistor, Precision, 47.5K, 1%	RAN.25F4752D
R14,R16	Resistor, Precision, 100K, 1%	RAN.25F1003D
R11	Resistor, Precision, 150K, 1%	RAN.25F1503D
R15	Resistor, Precision, 255K, 1%	RAN.25F2553D
R13	Resistor, Precision, 4.75K, 1%	RAN.25F4751D
R75	Resistor, Network 2.2K x 7	750-81-R2.2K
R34/S1	Potentiometer,10K/DPDT push-pull sw.	0676-401A01=11Z
R19,R24	Resistor, Adjustable, 500 ohms	63X501
R72	Resistor, Adjustable, 50K ohms	63X503
S1	Part of R34 Assembly	
S2	Switch, Toggle, SPDT Miniature	ST1-1
S3	Switch, Rocker, DPST	2600-13E
S4	Switch, Thumbwheel, 3 Digit BCD	44011S-3
T1	Transformer, Power	0676-402B01=11Z
T2	Torroid	0676-403B01=11Z
U1	Integrated Circuit, Digital	7407PC
U2	Integrated Circuit, Linear	MP5507DP
U3	Integrated Circuit, Linear	UA324PC
U4	Integrated Circuit, Digital	74LS132
U5	Integrated Circuit, A/D	0676-413A01=11Z
U6	Integrated Circuit, Microprocessor	*SPP832AC
U7	Integrated Circuit, Opto-Coupler	4N40
U8	Integrated Circuit, Digital	74LS86
U9	Integrated Circuit, Digital	74LS112
U10,U11,U12	Integrated Circuit, Opto-Coupler	4N26
Y1	Crystal	70740-2

*Revised 6/7/84/jdw

MECHANICAL PARTS LIST

The following items are replaceable mechanical parts for the SMP/CMP Microprocessor family of temperature control modules. Although it is unlikely that any of these parts will require replacement during the normal life of the unit, the information is provided for servicing convenience.

DESCRIPTION	PART NUMBER
Meter Retaining Spring Clip	670-403A
Nylatch Plunger	HN3P-33-4-1
Nylatch Grommet	HN3G-33-1
Handle	A-1594-2
Knob, Manual Adj.	PKG60B-6MM

MICROPROCESSOR CONTROLLER JUMPER LOCATIONS

INSTALL JUMPER (FROM 4 TO 3) TO SELECT T.C. BREAK HOLD FUNCTION

INSTALL JUMPER (1) FOR 50 HZ OPERATION (NO JUMPER FOR 60 HZ)

INSTALL JUMPER (2) FOR °C OPERATION (NO JUMPER FOR °F)

TEST JUMPER ONLY
SHORT 6 TO 5 FOR A ZERO METER READING (REFER TO CALIBRATION PROCEDURES)

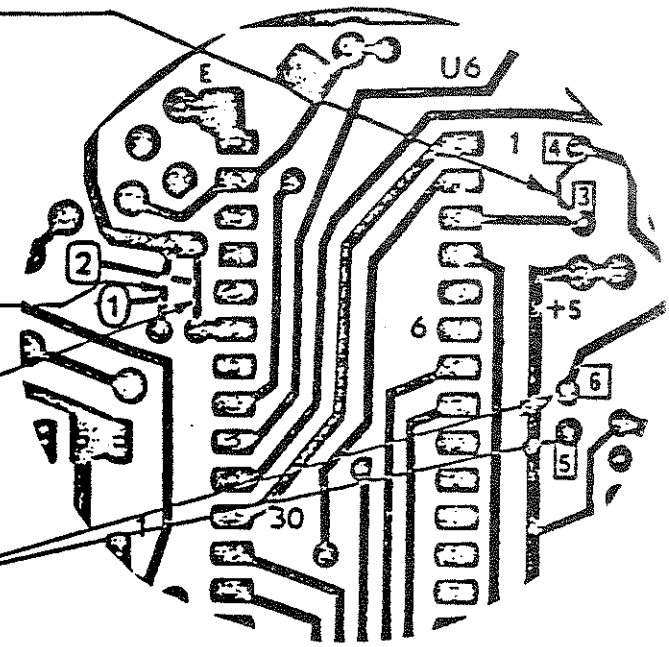

FOR PRINTED CIRCUIT BOARDS DATED 2/82

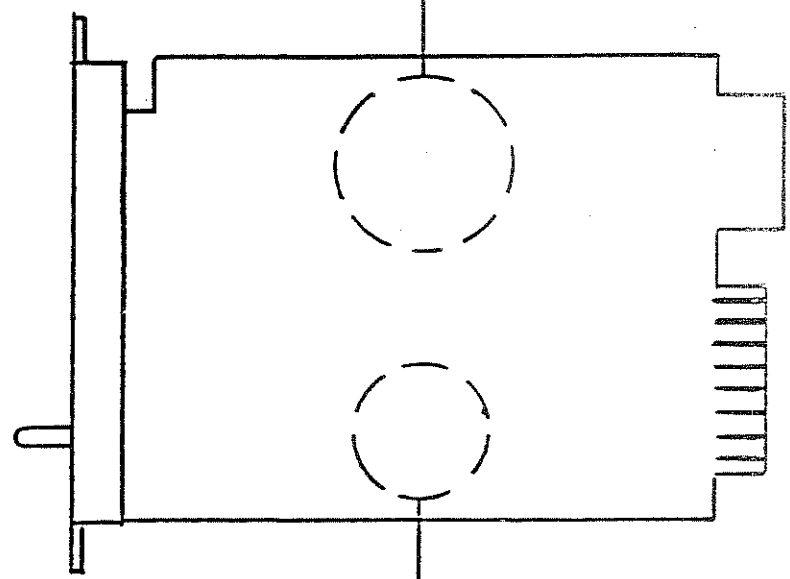

INSTALL TWO JUMPERS FOR 120VAC INPUT (NOTE: UNITS ARE FACTORY WIRED FOR 240V, REMOVE 240V JUMPER PRIOR TO INSTALLING 120V JUMPER)

INSTALL JUMPER FOR 240VAC INPUT (NOTE: UNITS ARE FACTORY WIRED FOR 240VAC)

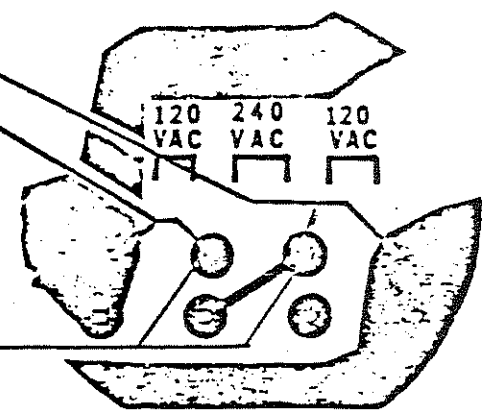

MICROPROCESSOR CONTROLLER JUMPER LOCATIONS

INSTALL INSULATED JUMPER (FROM 4 TO 3) TO SELECT T.C. BREAK HOLD FUNCTION

INSTALL JUMPER (2) FOR °C OPERATION (NO JUMPER FOR °F)

INSTALL JUMPER (1) FOR 50 HZ OPERATION (NO JUMPER FOR 60 HZ)

TEST JUMPER ONLY
SHORT 6 TO 5 FOR A ZERO METER READING (REFER TO CALIBRATION PROCEDURES)

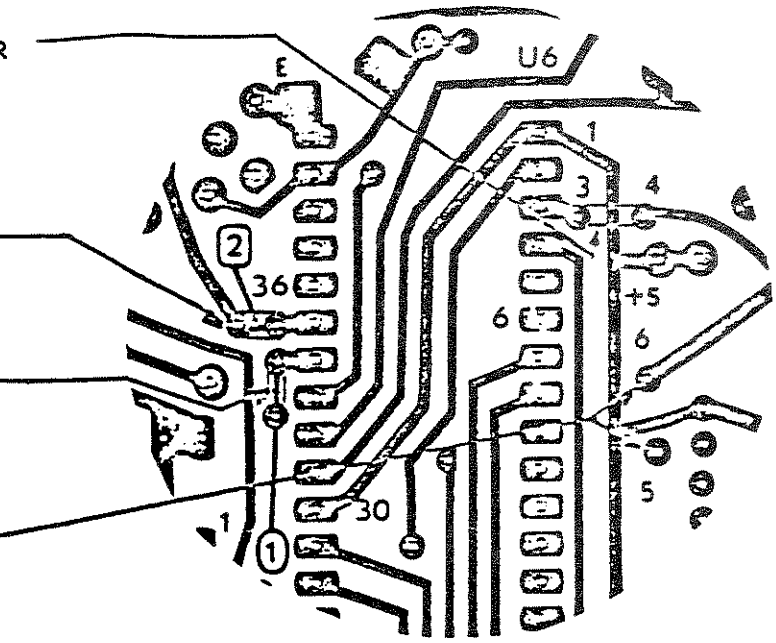

FOR PRINTED CIRCUIT BOARDS DATED 10/81

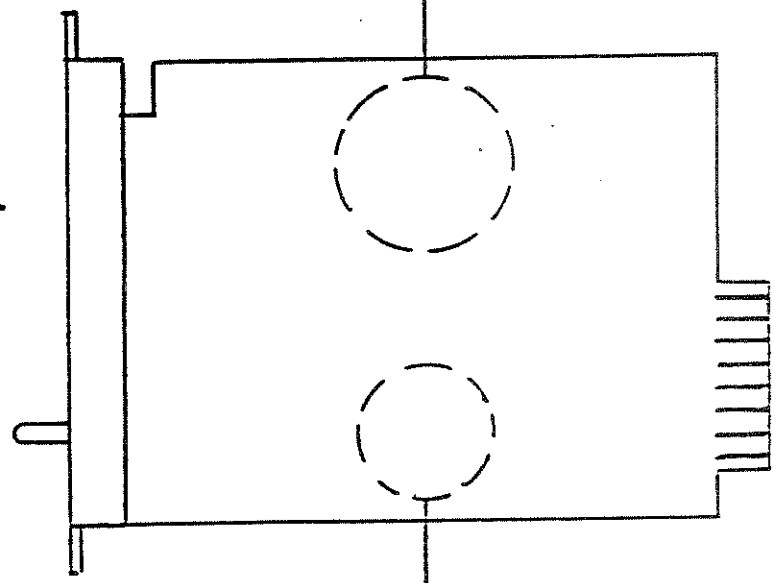

CONVERTING FROM 240VAC TO 120VAC OPERATION

INSTALL TWO INSULATED JUMPERS (FROM 4 TO 2, AND FROM 3 TO 1)

CUT PRINTED CIRCUIT BOARD RUN BETWEEN POINTS 2 AND 3

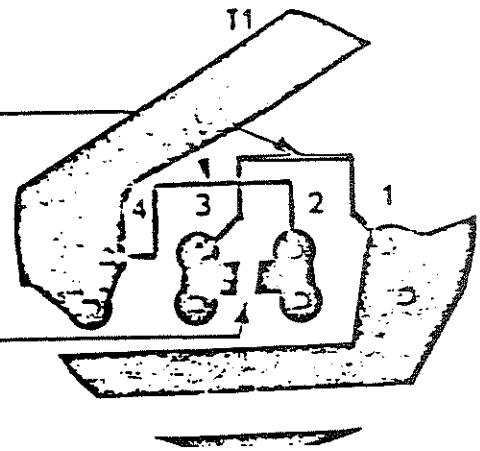

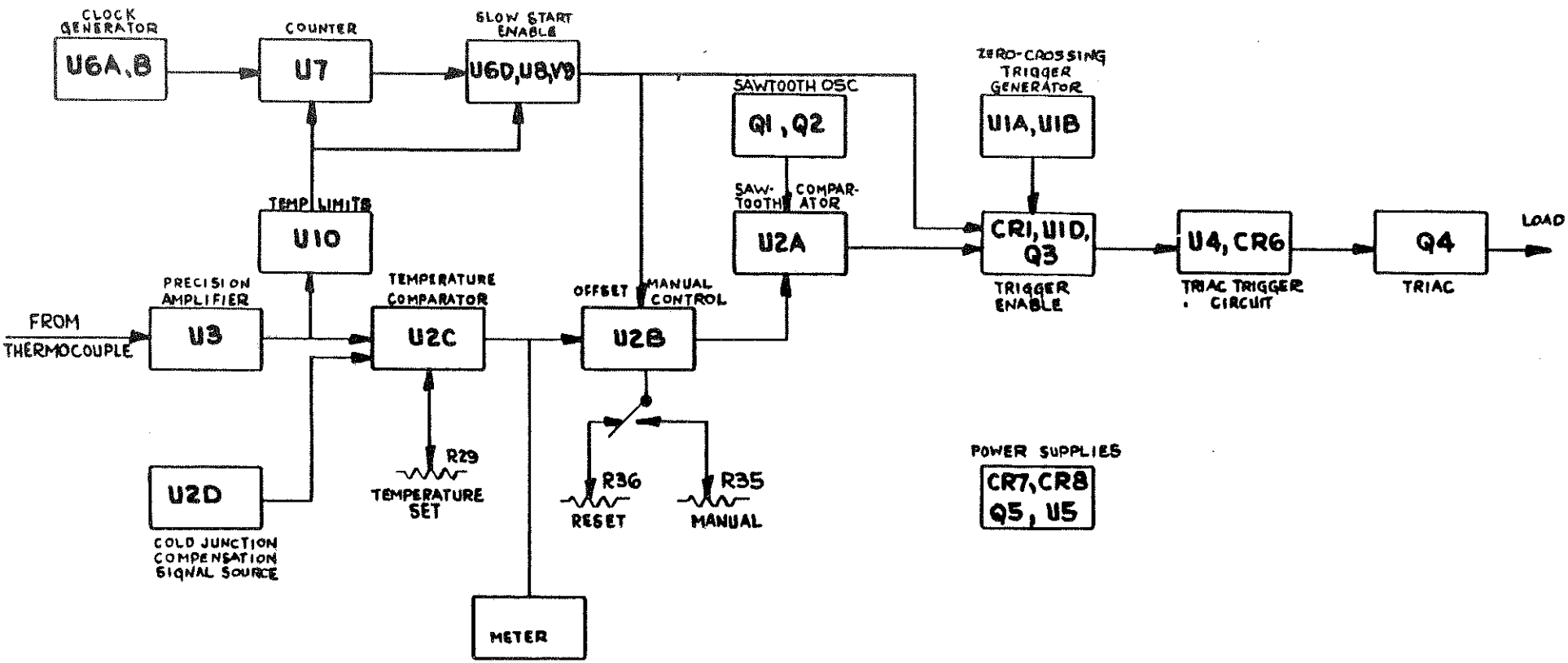

D-M-E COMPANY
MADISON HEIGHTS, MICHIGAN 48071 U.S.A.

DETAIL NAME: BLOCK DIAGRAM

ASSEMBLY NAME: FC 10

MATERIAL	BREAK ALL SHARP EDGES WITH .015 RADIUS UNLESS OTHERWISE SPECIFIED	TOLERANCES UNLESS NOTED	SCALE: NONE
HEAT TREAT		FRACTIONS ± .015	CHECKED: BG 11-11-81
		.00 ± .010	DRAWN: RLS 11-11-81
		.000 ± .005	APPROVED: R
		ANGLES ± 1°	PROJECT NO.
			PART NO.

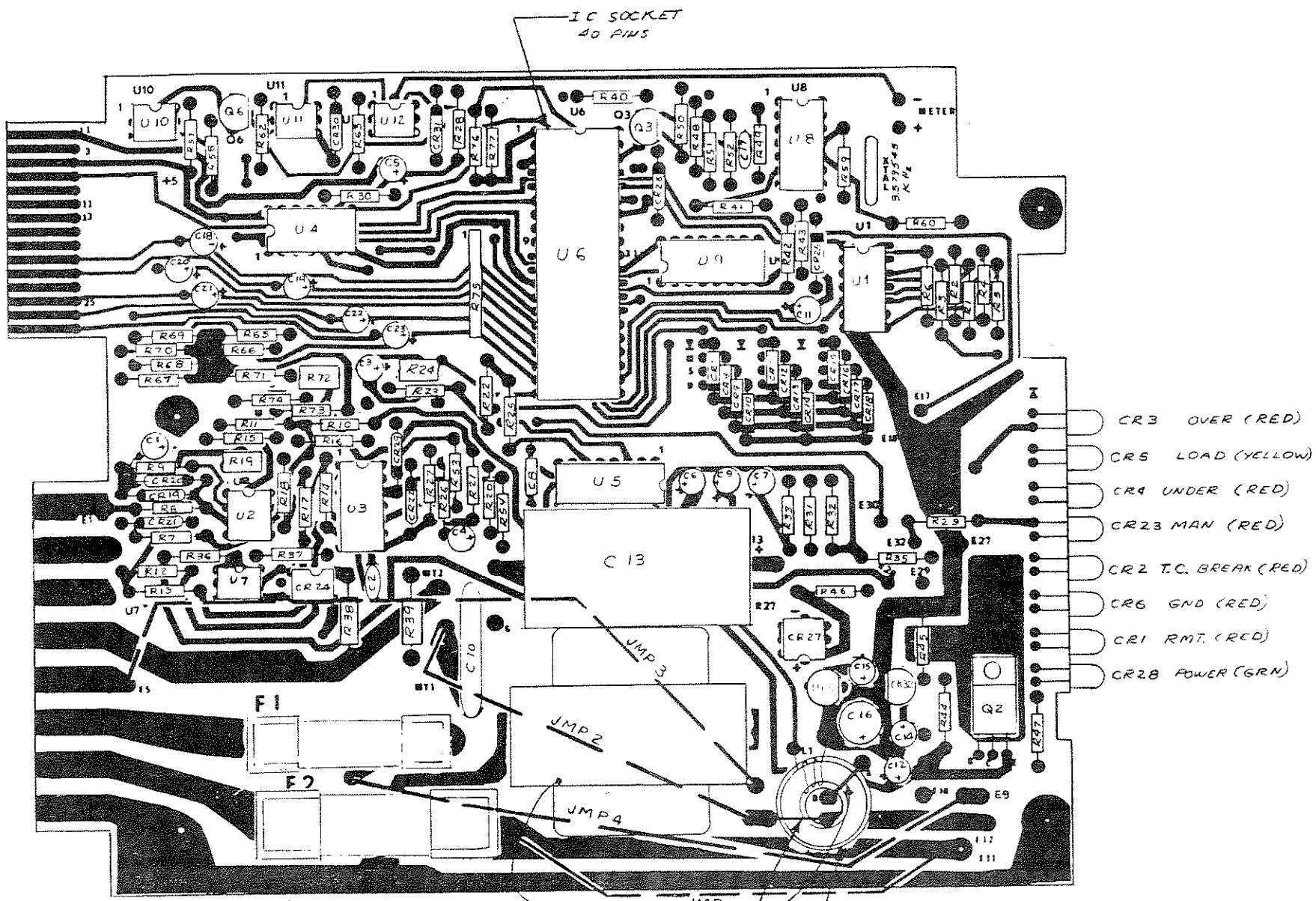

JUMPERS 1, 2, 3 & 4 (18 AWG INSULATED WIRE)
TO BE INSTALLED ON 15 AMP MODULES ONLY

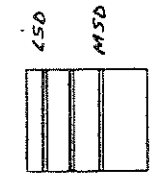

S4
THUMBWHEEL
SWITCH

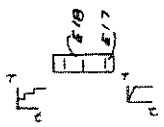

S2
SLO-START
SWITCH

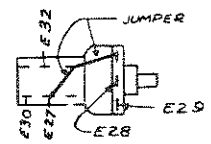

R34/51
% POWER
AUTO/MAN SWITCH

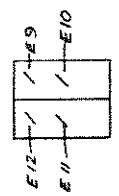

S3
ON/OFF
SWITCH

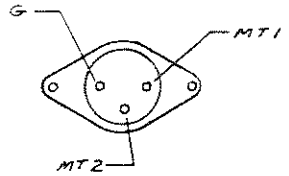

Q1
TRIAC

REVISIONS					
ZONE	LTR	CODE	DESCRIPTION	DATE	APPVD
	D		SEE 0676-5C1D01 AND 0676-5C1A02	[illegible]	
	E		REMOVE R59	[illegible]	
	F		R4C WAS 1.0K R42 WAS 2.2K REMOVE CR24 [illegible]	[illegible]	
	G		REMOVE [illegible] R27 WAS [illegible] U5-12 WAS 4N26 R26 WAS 12K	[illegible]	
	H		SEE ECN 83-[illegible] EXTENSIVLY REVISED AND REDRAWN	[illegible]	
	J	ECN 83-[illegible]	R38 WAS 330 REMOVED CR25 ADDED C24 AND R64	6-24-83	

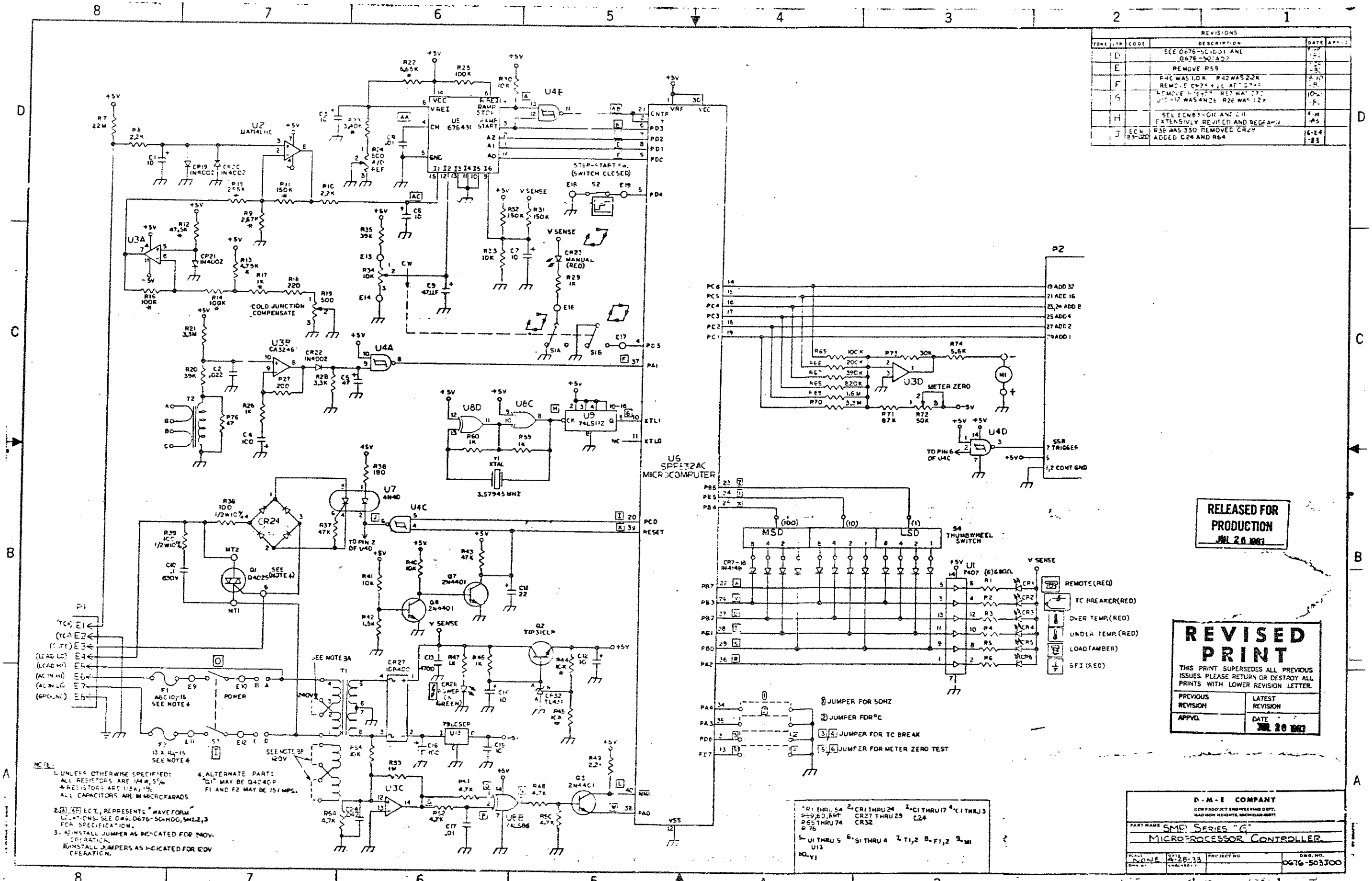

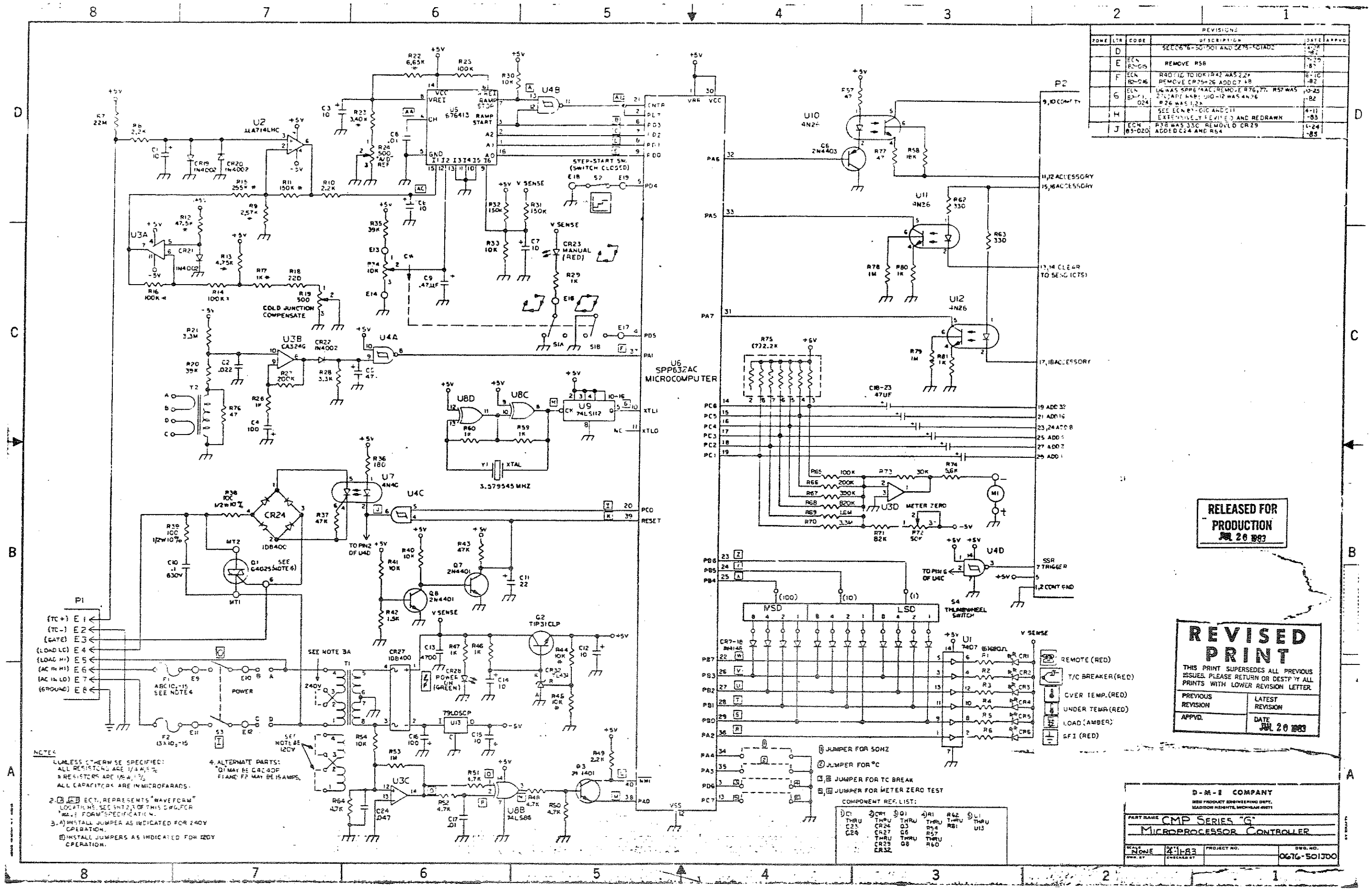

ZONE	LTR	CODE	DESCRIPTION	DATE	APPVD
	D		SEE 0676-501501 AND 0275-501402	4-25-83	
	E	ECN 83-015	REMOVE R58	4-29-83	
	F	ECN 82-016	R40 TO 10K, R42 WAS 2.2K REMOVE CR25-26 ADDED 7 LB	8-10-82	
	G	ECN 82-024	U6 WAS SPP632AC, REMOVE R76, 77. R57 WAS 270, ADD R68; U10-12 WAS 4N26 R26 WAS 1.2K	10-25-82	
	H		SEE ECN 81-010 AND 011 EXTENSIVELY REVISED AND REDRAWN	4-11-83	
	J	ECN 83-020	R38 WAS 33C REMOVED CR29 ADDED C24 AND R54	11-24-83	